06 - 2013
EA3201S40B
32CC CHAINSAW 16" 3/8" 50G

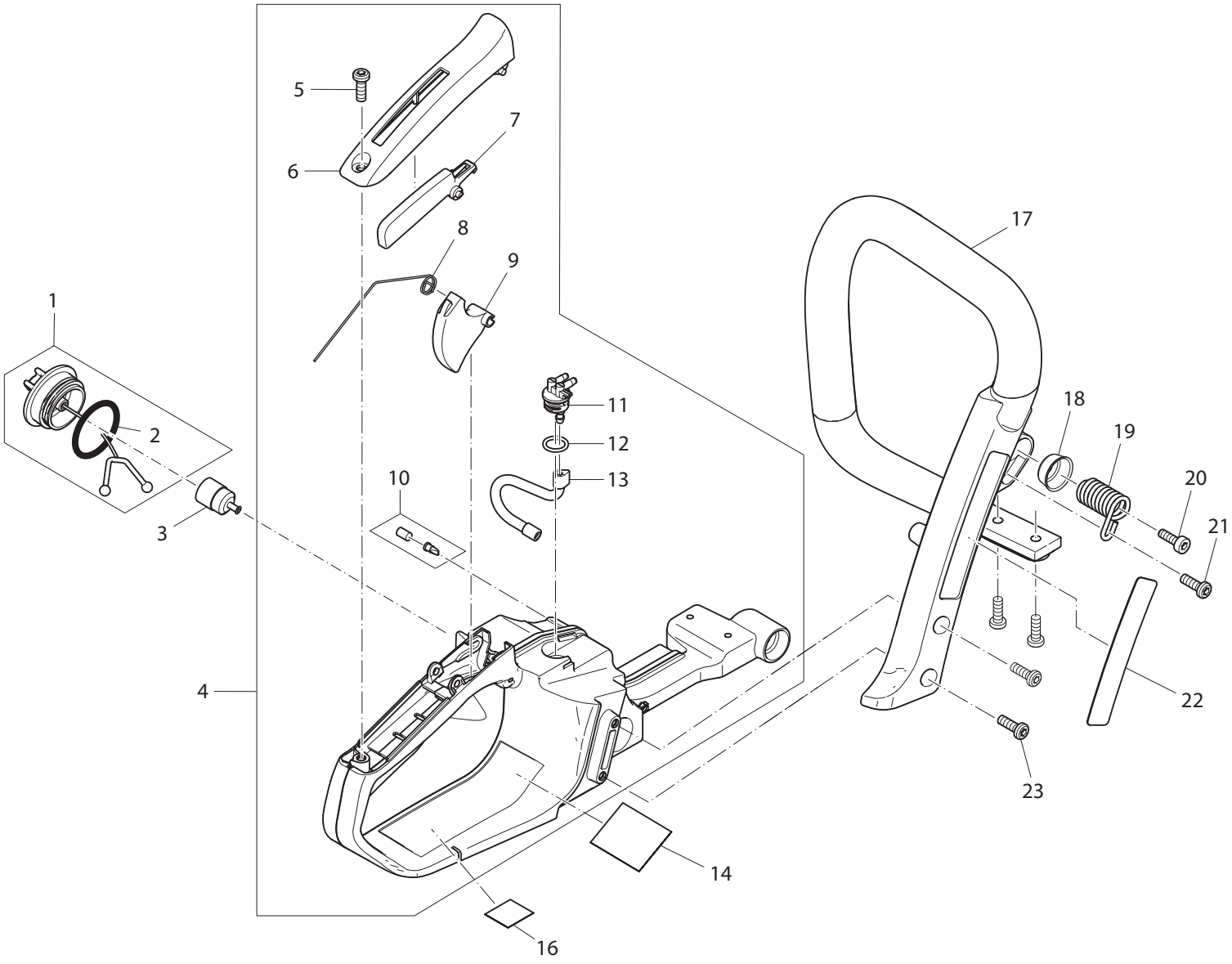

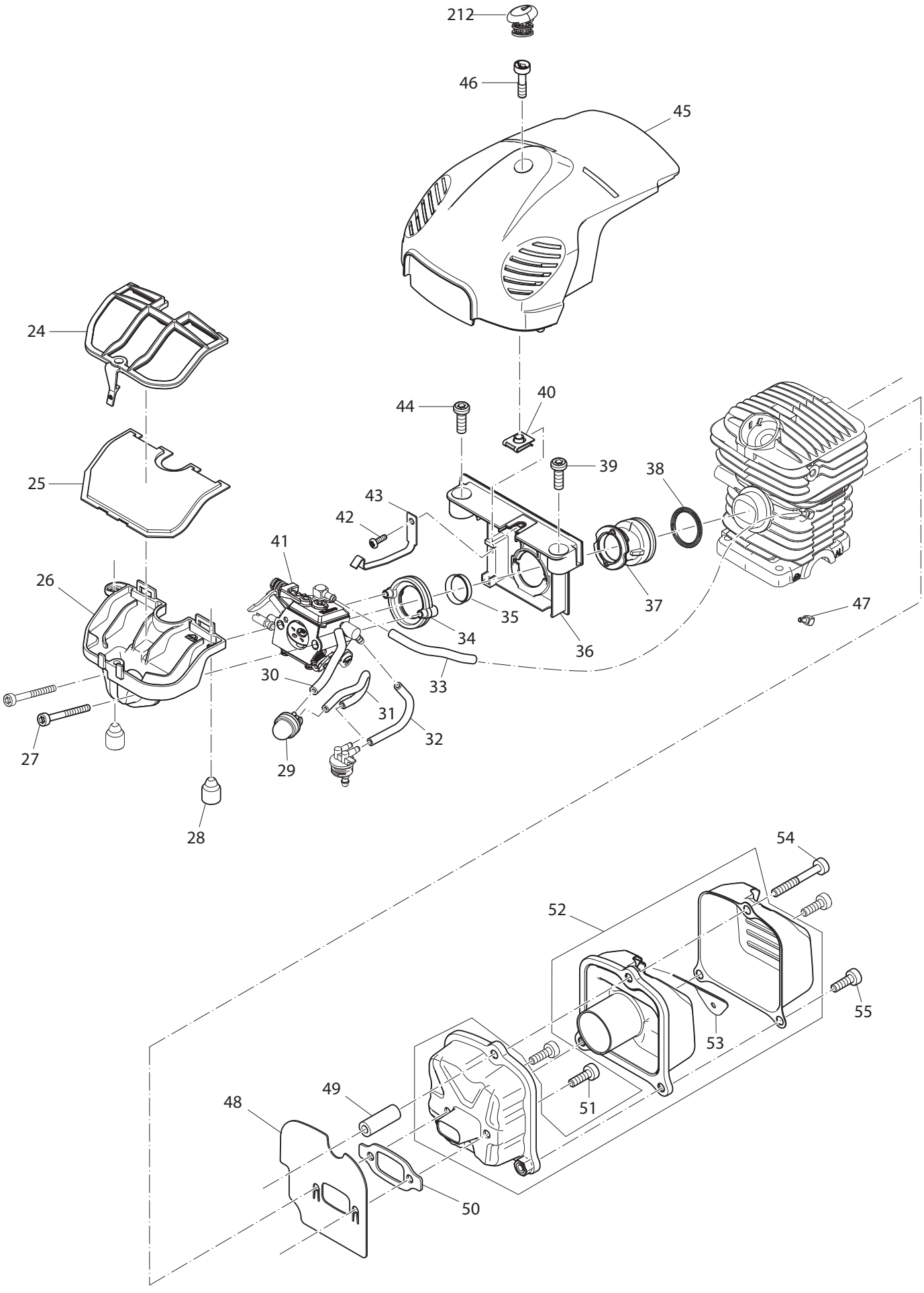

2 MODEL EA3201S40B

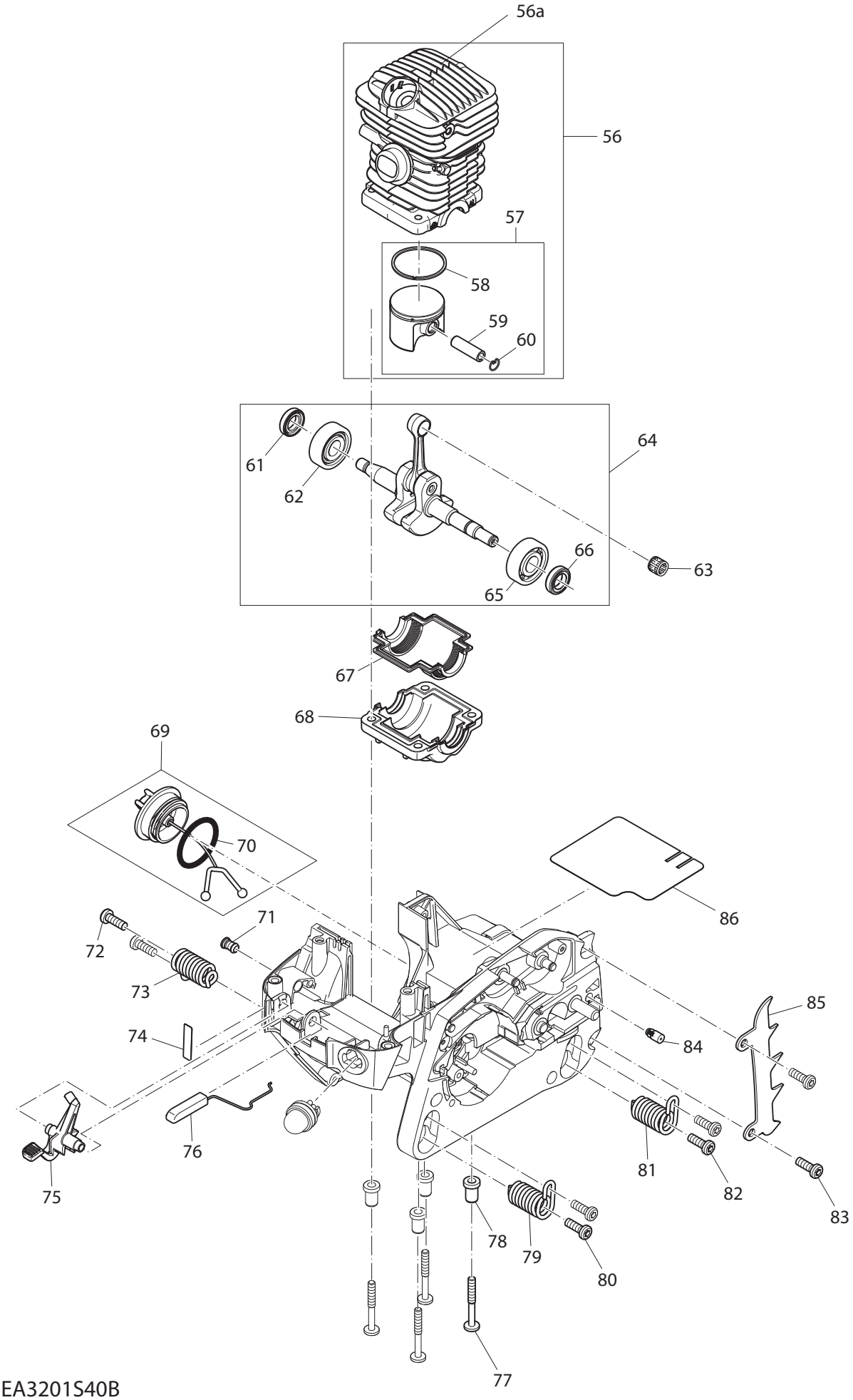
56a
56
57
58
59
60
61
62
64
63
66
65
67
68
69
70
71
72
73
74
75
76
86
85
84
81
82
83
78
79
80
77

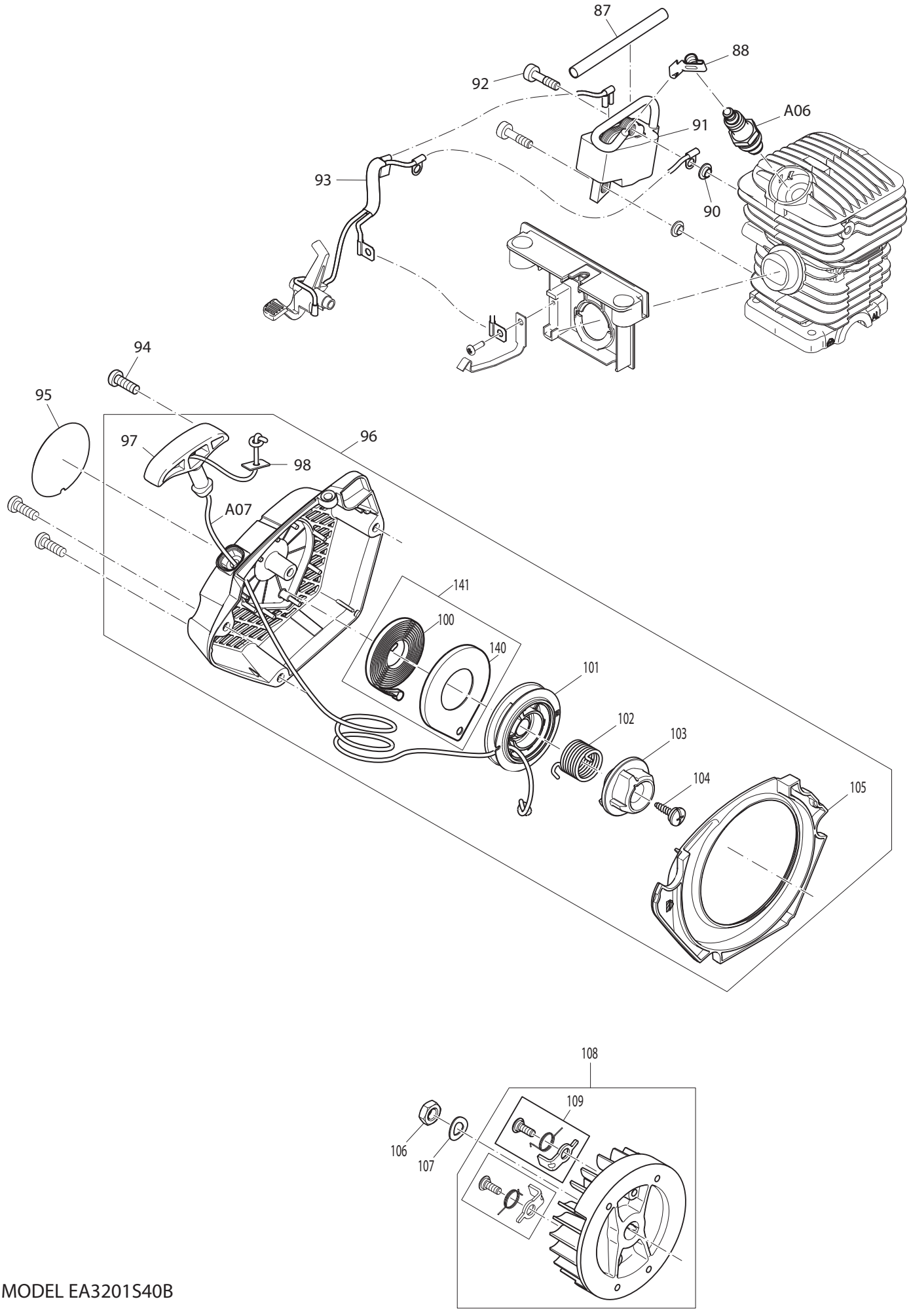
87
88
92
A06
91
93
90
94
95
96
97
98
A07
141
100
140
101
102
103
104
105
108
109
106
107

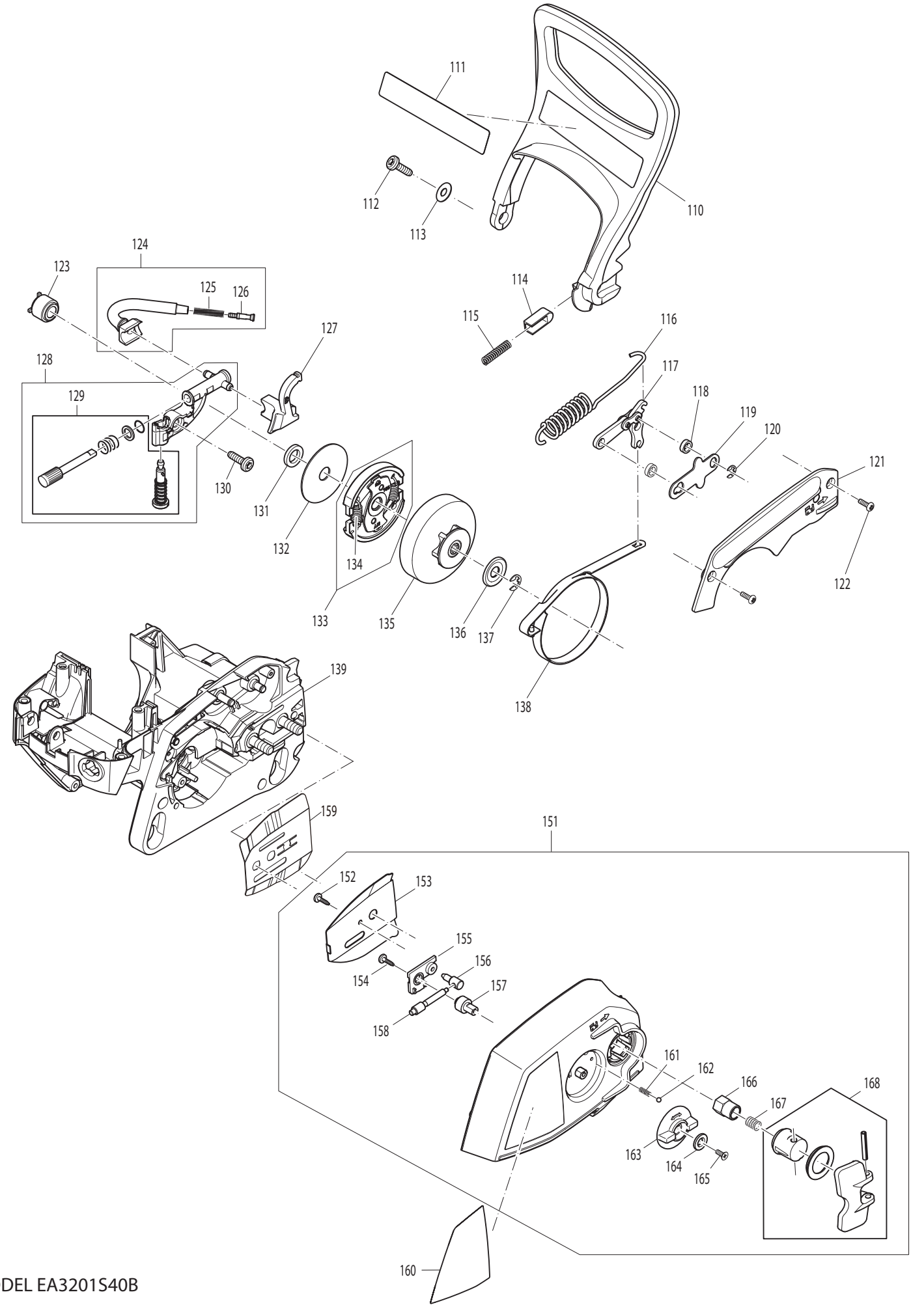
111
112
113
110
124
123
125
126
114
115
116
127
128
129
117
118
119
120
121
130
131
132
134
133
135
136
137
122
138
139
159
151
152
153
155
154
156
157
158
161
162
166
168
167
163
164
165
160

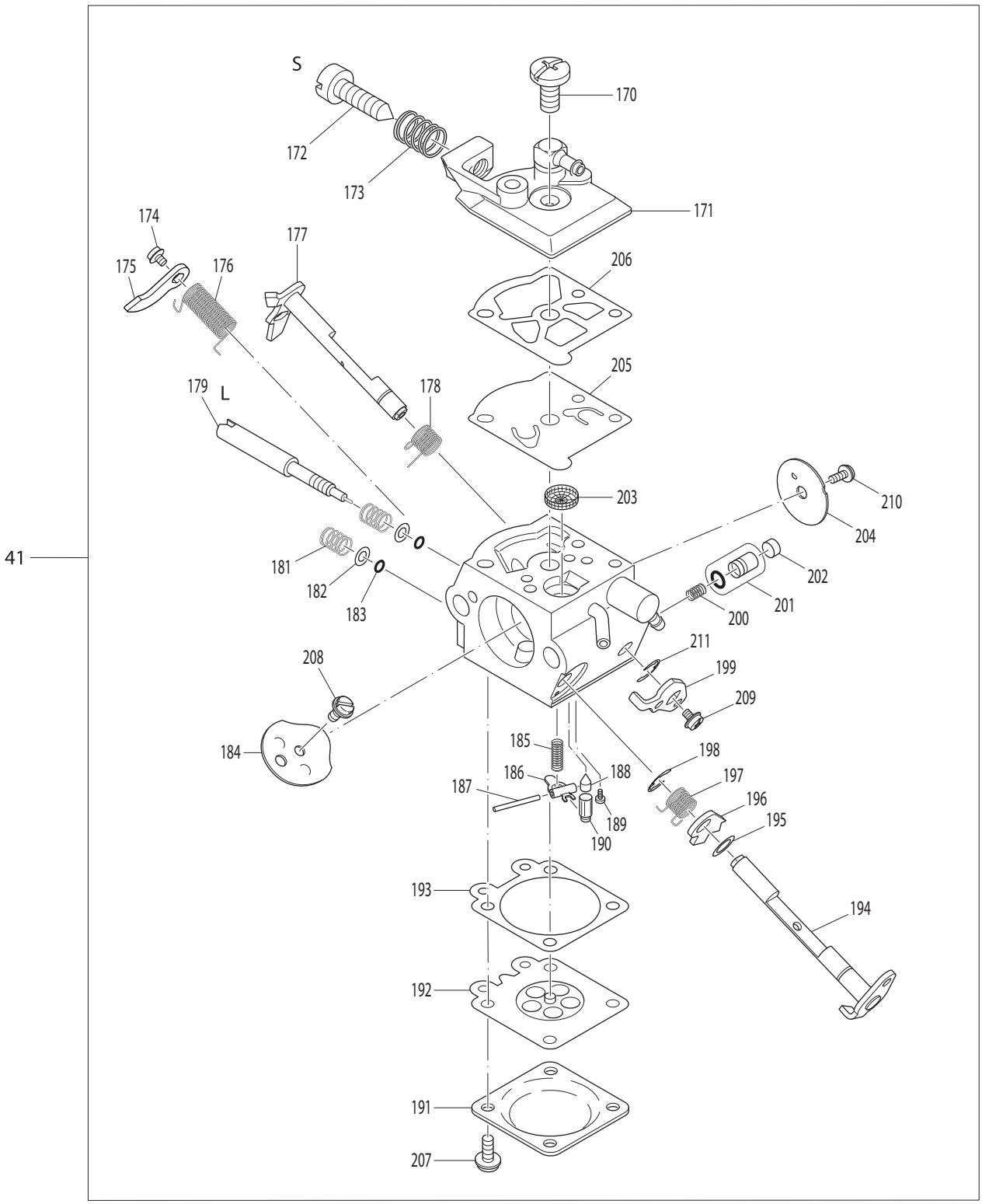
41
S
170
172
173
171
174
175
176
177
206
205
179
L
178
203
210
204
181
182
183
202
201
200
211
208
199
209
184
185
198
186
188
187
197
196
189
190
195
193
194
192
191
207

Item No.	Type	Sub	Part No.	Description	Qty	Unit
1			168507-3	TANK CAP COMPLETE	1	PC.
		INC.		Item No. 2		
2			213080-9	O RING 29.5	1	PC.
3			163447-0	GASOLINE FILTER	1	PC.
4			195758-5	TANK ASSEMBLY A BLUE	1	PC.
		INC.		Item No. 5-13		
5			266651-1	H.L. TAPPING SCREW 5.5X16	1	PC.
6			452021-2	GRIP SHELL	1	PC.
7			452020-4	CATCH LEVER	1	PC.
8			231866-9	TORSION SPRING 10	1	PC.
9			452019-9	THROTTLE LEVER	1	PC.
10			195762-4	AIR VALVE SET	1	PC.
11			452018-1	FUEL NIPPLE	1	PC.
12			213586-7	O RING 11.5	1	PC.
13			424456-7	FUEL LINE	1	PC.
14			869091-8	EA3201S NAME PLATE	1	PC.
16			892505-2	CAUTION LABEL	1	PC.
17			452036-9	TUBULAR HANDLE	1	PC.
18			346517-2	CUP WASHER 6	1	PC.
19			234189-4	COMPRESSION SPRING 12	1	PC.
20			266605-8	H.L. SOCKET HEAD BOLT M5X16	1	PC.
21			266651-1	H.L. TAPPING SCREW 5.5X16	1	PC.
22			891898-4	MAKITA LOGO LABEL	1	PC.
23			266651-1	H.L. TAPPING SCREW 5.5X16	4	PC.
24			452031-9	AIR FILTER COVER	1	PC.
25			423414-0	AIR FILTER	1	PC.
26			452030-1	INTAKE MANIFOLD	1	PC.
27			266604-0	H.L. SOCKET HEAD BOLT M4X40	2	PC.
28			424173-9	DAMPING PLUG	2	PC.
29			168398-2	PRIMER PUMP	1	PC.
30			422067-2	TUBE 2.5-55	1	PC.
31			422065-6	TUBE 2.5-112	1	PC.
32			422068-0	TUBE 3-70	1	PC.
33			422066-4	TUBE 2.5-72	1	PC.
34			318634-8	FLANGE RING	1	PC.
35			346413-4	BUSH 17	1	PC.
36			452024-6	INTERMEDIATE FLANGE	1	PC.
37			424340-6	INTAKE HOSE	1	PC.
38			233971-8	RING SPRING	1	PC.
39			266651-1	H.L. TAPPING SCREW 5.5X16	1	PC.
40			264044-6	SNAP NUT M5	1	PC.
41			168779-0	CARBURETOR	1	PC.
		INC.		Item No. 170-179, 181-211		
42			266421-8	TAPPING SCREW 3X10	1	PC.
43			346290-4	CONTACT SPRING	1	PC.
44			266651-1	H.L. TAPPING SCREW 5.5X16	1	PC.
45			452023-8	HOOD	1	PC.
46			266607-4	H.L. SOCKET HEAD BOLT M5X20	1	PC.
47			325938-1	ANGULAR NIPPLE	1	PC.
48			346306-5	COOLING PLATE	1	PC.
49			325939-9	CONNECTING LINK	1	PC.
50			346304-9	GASKET	1	PC.
51			266605-8	H.L. SOCKET HEAD BOLT M5X16	2	PC.
52			168604-5	MUFFLER COMPLETE	1	PC.
		INC.		Item No. 53		PC.
53			346294-6	SPARK ARRESTER SCREEN	1	PC.
54			266606-6	H.L. SOCKET HEAD BOLT M5X40	1	PC.
55			266605-8	H.L. SOCKET HEAD BOLT M5X16	2	PC.

Item No.	Type	Sub	Part No.		Description	Qty	Unit
56	1		195759-3	*	CYLINDER PISTON SET	1	PC.
		INC.		*	Item No. 56a-1, 57		PC.
	2		196384-3	*	CYLINDER PISTON SET	1	PC.
		INC.		*	Item No. 56a-2, 57		PC.
56a	1	INC.	----------	*	CYLINDER 38	1	PC.
	2	INC.	142136-0	*	CYLINDER COMPLETE	1	PC.
		INC.		*	Item No. 47		
57			195760-8	*	PISTON SET	1	PC.
		INC.		*	Item No. 58-60		PC.
58			325991-7		PISTON RING 38	1	PC.
59			325992-5		PISTON PIN 8	1	PC.
60			233988-1		RING SPRING 8	1	PC.
61			213582-5		OIL SEAL 12	1	PC.
62			211341-1		BALL BEARING 6201	1	PC.
63			212086-4		NEEDLE CAGE 810	1	PC.
64			195956-1		CRANK SHAFT SET	1	PC.
		INC.			Item No. 61,62,65,66		PC.
65			211341-1		BALL BEARING 6201	1	PC.
66			213582-5		OIL SEAL 12	1	PC.
67			424339-1		CRANK CASE SEALING	1	PC.
68			318633-0		CRANKCASE UNDERSIDE	1	PC.
69			168507-3		TANK CAP COMPLETE	1	PC.
		INC.			Item No. 70		PC.
70			213080-9		O RING 29.5	1	PC.
71	1		452629-2		PLUG	1	PC.
71	2		452727-2		PLUG	1	PC.
72			266651-1		H.L. TAPPING SCREW 5.5X16	2	PC.
73			234189-4		COMPRESSION SPRING 12	1	PC.
74			816917-5		INDICATION LABEL	1	PC.
75			452025-4		CHOKE LEVER	1	PC.
76			452022-0		THROTTLE LINKAGE	1	PC.
77			266608-2		H.L.TAPPING SCREW 5X40	4	PC.
78			325946-2		BUSH 6	4	PC.
79			234189-4		COMPRESSION SPRING 12	1	PC.
80			266651-1		H.L. TAPPING SCREW 5.5X16	2	PC.
81			234189-4		COMPRESSION SPRING 12	1	PC.
82			266651-1		H.L. TAPPING SCREW 5.5X16	2	PC.
83			266651-1		H.L. TAPPING SCREW 5.5X16	2	PC.
84			168504-9		VENT VALVE	1	PC.
85			346301-5		SPIKE BAR	1	PC.
86			346385-3		HEAT PROTECTION FOIL	1	PC.
87	1		444029-0	*	ISOLATING TUBE 6-95	1	PC.
	2		444042-8	*	ISOLATING TUBE 6-80	1	PC.
88	1		346445-1	*	SPARK PLUG CONNECTOR	1	PC.
	2		424522-0	*	PLUG CAP	1	PC.
		INC.	326210-4	*	Terminal Spring	1	PC.
90			452670-5		ISOLATING WASHER	2	PC.
91	1		125808-2	*	IGNITION COIL ASSEMBLY	1	PC.
		INC.		*	Item No. 87,88		PC.
	2		126270-4	*	IGNITION COIL ASSEMBLY	1	PC.
		INC.		*	Item No. 87,88		PC.
92			266631-7		H.L. SOCKET HEAD BOLT M5X20	2	PC.
93			168601-1		CABLE HARNESS	1	PC.
94			266651-1		H.L. TAPPING SCREW 5.5X16	3	PC.
96			168608-7		STARTER COMPLETE BLUE	1	PC.
		INC.			Item No. 97-99,101-105,141		PC.
97			453783-5		STARTER GRIP	1	PC.
98			267847-7		SQUARE WASHER 4	1	PC.

Item No.	Type	Sub	Part No.	Description	Qty	Unit
100			234252-3	REWIND SPRING - Not available individually	1	PC.
101			453785-1	REEL	1	PC.
102			234253-1	TORSION SPRING 20	1	PC.
103			453786-9	CAM PLATE	1	PC.
104			266777-9	TAPPING SCREW 5X12	1	PC.
105			452026-2	AIR GUIDE PLATE	1	PC.
106			264053-5	HEX. NUT M8X1	1	PC.
107			267822-3	SPRING WASHER 8	1	PC.
108			140480-9	FLYWHEEL COMPLETE	1	PC.
		INC.		Item No. 109		PC.
109			195761-6	RATCHET SET	2	PC.
110			452032-7	HAND GUARD	1	PC.
111			810449-4	CAUTION LABEL	1	PC.
112			266627-8	H.L. TAPPING SCREW 4.7X16	1	PC.
113			267066-5	FLAT WASHER 5	1	PC.
114			313212-9	HAND GUARD GUIDE	1	PC.
115			234210-9	COMPRESSION SPRING 6	1	PC.
116			231868-5	TENSION SPRING 10	1	PC.
117			163500-2	LINK PLATE COMPLETE	1	PC.
118			325947-0	BUSH 6	2	PC.
119			346299-6	SPACER SHEET METAL	1	PC.
120			961011-9	STOP RING E-4	1	PC.
121			452033-5	BRAKE COVER	1	PC.
122			266421-8	TAPPING SCREW 3X10	2	PC.
123			452035-1	PUMP DRIVE	1	PC.
124			168645-1	OIL SUCTION LINE COMPLETE	1	PC.
		INC.		Item No. 125,126		PC.
125			234207-8	COMPRESSION SPRING 6	1	PC.
126			452666-6	NIPPLE	1	PC.
127			424342-2	OIL PRESSURE LINE	1	PC.
128			168503-1	OIL PUMP COMPLETE	1	PC.
		INC.		Item No. 129		PC.
129			195872-7	OIL PUMP ADJUSTMENT SET - Not available individually	1	PC.
130			266627-8	H.L. TAPPING SCREW 4.7X16	1	PC.
131			267430-0	FLAT WASHER 10	1	PC.
132			267431-8	FLAT WASHER 10	1	PC.
133			168607-9	CLUTCH COMPLETE	1	PC.
		INC.		Item No. 134		PC.
134			231873-2	TENSION SPRING 5	2	PC.
135			140980-9	CLUTCH DRUM ASSEMBLY	1	PC.
136			267451-2	FLAT WASHER 8	1	PC.
137			259033-4	RETAINING RING E TYPE 6	1	PC.
138			346298-8	BRAKE BAND	1	PC.
139			140482-5	ENGINE HOUSING COMPLETE TLC B	1	PC.
140			453784-3	SPRING CASSETTE - Not available individually	1	PC.
141			195955-3	REWIND SPRING SET	1	PC.
		INC.		Item No. 100,140		PC.
151			140510-6	SPROCKET GUARD TLC COMPLETE B	1	PC.
		INC.		Item No. 152-158,161-168		PC.
152			266007-8	TAPPING SCREW BIND PT 3X10	1	PC.
153			346309-9	GUIDE PLATE	1	PC.
154			266007-8	TAPPING SCREW BIND PT 3X10	1	PC.
155			417403-5	COVER	1	PC.
156			324068-5	ADJUST PIN	1	PC.
157			226681-4	HELICAL GEAR 17	1	PC.
158			226534-7	HELICAL GEAR 8	1	PC.
159			346518-0	GUIDE PLATE	1	PC.
160			892502-8	INDICATION LABEL	1	PC.

Item No.	Type	Sub	Part No.	Description	Qty	Unit
161			233033-2	COMPRESSION SPRING 4	1	PC.
162			216008-6	STEEL BALL 4	1	PC.
163			419233-0	DIAL 40	1	PC.
164			253874-0	FLAT WASHER 4	1	PC.
165			915106-0	BINDING HEAD SCREW M4X8	1	PC.
166			264042-0	HEX. NUT M8-13	1	PC.
167			231025-5	COMPRESSION SPRING 8	1	PC.
168			195764-0	WING GRIP SET	1	PC.
170			WJ00096166	SCREW	1	PC.
171			WJ00213750	COVER ASSEMBLY-PUMP	1	PC.
172			WJ00096369	SCREW-IDLE ADJ.	1	PC.
173			WJ00098356	SPRING	1	PC.
174			WJ00096475	SCREW	1	PC.
175			WJ00183519	LEVER-CHOKE	1	PC.
176			WJ00983585	SPRING	1	PC.
177			WJ00223556	SHAFT ASSEMBLY-THROTTLE	1	PC.
178			WJ00098494	SPRING	1	PC.
179			WJ01023908	NEEDLE-IDLE	1	PC.
181			WJ00098404	SPRING	2	PC.
182			WJ00136152	WASHER	2	PC.
183			WJ00016105	RING-O	2	PC.
184			WJ00062150	VALVE-CHOKE	1	PC.
185			WJ00983270	SPRING	1	PC.
186			WJ00166114	LEVER-METERING	1	PC.
187			WJ00014477	PIN-METERING LEVER	1	PC.
188			WJ00008282	VALVE-INLET NEEDLE	1	PC.
189			WJ00963226	SCREW	1	PC.
190			WJ00088271	PLUG-WELCH	1	PC.
191			WJ00021158	COVER-METERING DIAPHRAGM	1	PC.
192			WJ00095613	DIAPHRAGM ASSEMBLY-METERING	1	PC.
193	1		WJ00092192	GASKET-METERING DIAPHRAGM	1	PC.
	2		442183-4	GASKET-METERING DIAPHRAGM	1	PC.
194			WJ00223784	SHAFT ASSEMBLY-CHOKE	1	PC.
195			WJ00013690	WASHER	1	PC.
196			WJ00016682	LEVER-FAST IDLE	1	PC.
197			WJ00983584	SPRING	1	PC.
198			WJ00001673	RING-RETAINING	1	PC.
199			WJ00183366	LEVER-THROTTLE	1	PC.
200			WJ00983164	SPRING	1	PC.
201			WJ00160511	PISTON ASSMBLY-ACCELERATOR	1	PC.
202			WJ00088229	PLUG-CUP	1	PC.
203			WJ00014070	INLET SCREEN	1	PC.
204			WJ00343439	VALVE-THROTTLE	1	PC.
205			WJ00009589	DIAPHRAGM-PUMP	1	PC.
206			WJ00092225	GASKET-PUMP	1	PC.
207			WJ00096589	SCREW ASSEMBLY	4	PC.
208			WJ00096475	SCREW	1	PC.
209			WJ00096475	SCREW	1	PC.
210			WJ00096475	SCREW	1	PC.
211			WJ00001673	RING-RETAINING	1	PC.
212			424519-9	HOOD CAP (Added)	1	PC.
C01			872115-1	CARTON F/EA3201S40B	1	PC.

Item No.	Type	Sub	Part No.		Description	Qty	Unit
ACCESSORIES			***- See Catalogue or visit www.makita.ca for more accessories information -***				
A01			165202-6	*	GUIDE BAR 16", 3/8", .050"	1	PC.
A02			419560-5		CHAIN COVER 16", 3/8"	1	PC.
A03			528 092 656		SAW CHAIN 16", 3/8", .050"	1	PC.
A04			782026-1		UNIVERSAL WRENCH 13/16	1	PC.
A05			783012-5		SCREWDRIVER	1	PC.
A06			650109950		SPARK PLUG NGK CMR6A	1	PC.
A07			444038-9		STARTER ROPE	1	PC.

SERVICE CHANGES

1. Changes on Cylinder Piston Set (TI#98018)

Item No.		Description	Type 1	Type 2
56		Cylinder Piston Set	195759-3	196384-3
56a	INC.	Cylinder 38>Cylinder Complete	No Part number	142136-0
47		Angular Nipple	325938-1	INC.
57	INC.	PISTON SET	195760-8	

Above parts are completely interchangeable as a set.

Type 1

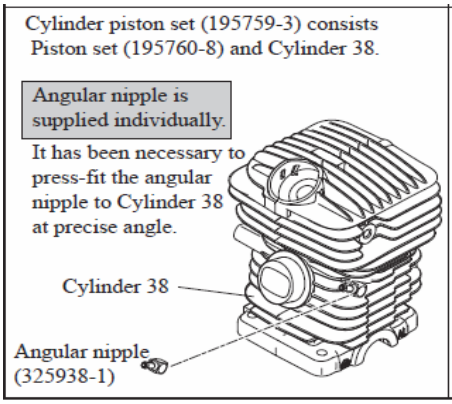

Type 2

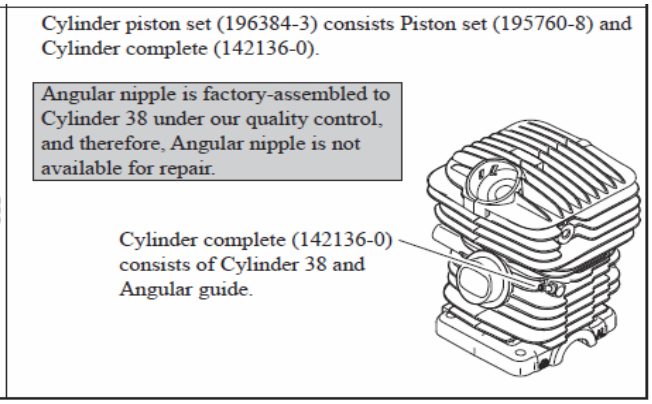

2. Change on Guide Bar (TI#97722)

Item No.		Description	Type 1	Type 2
A1		Guide Bar "16	165202-6	

Type 1

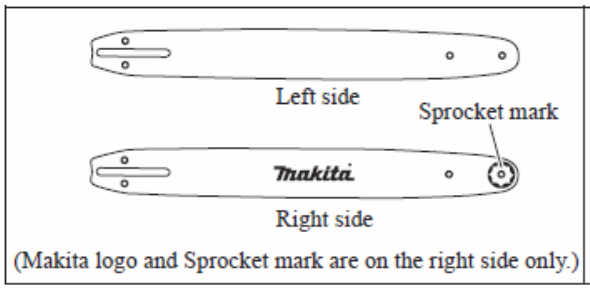

Type 2

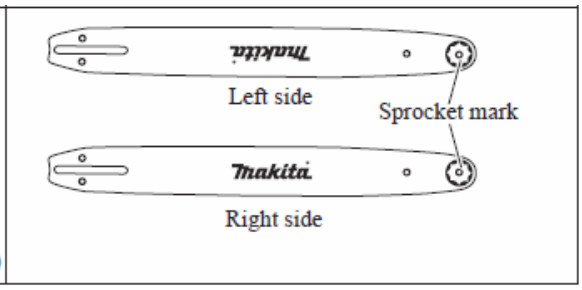

3. Changes on Ignition Section (TI#97722)

Item No.		Description	Type 1	Type 2
91		Ignition Coil Assembly	125808-2	126270-4
88		Spark Plug Connector	346445-1	424522-0
	INC.	>Plug Cap + Terminal	----------	324210-4
87		Isolating tube 6-95 >6-80	444029-0	444042-8

Above parts are completely interchangeable as a set.

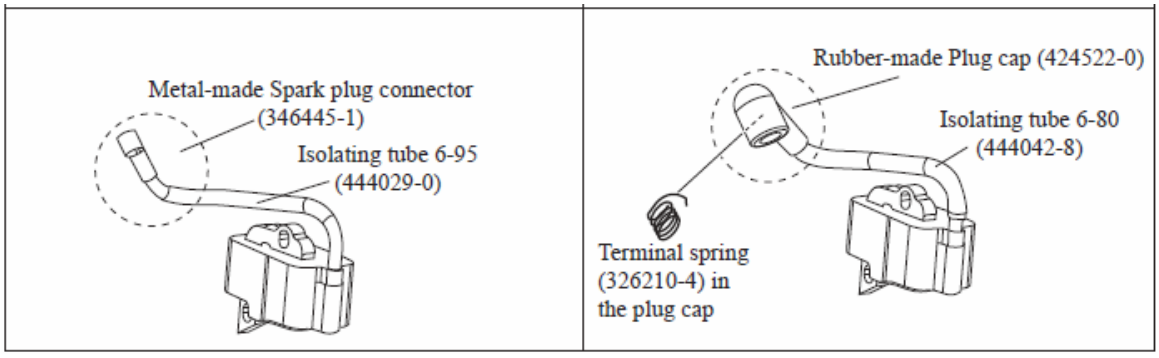

4. Add Hood Cap on Hood

Item No.		Description	Type 1	Type 2
212		Hood Cap	----------	424519-9

