Makita Canada Inc.

makita

5" RANDOM ORBIT SANDER V.S. Model BO5012K (MCA)

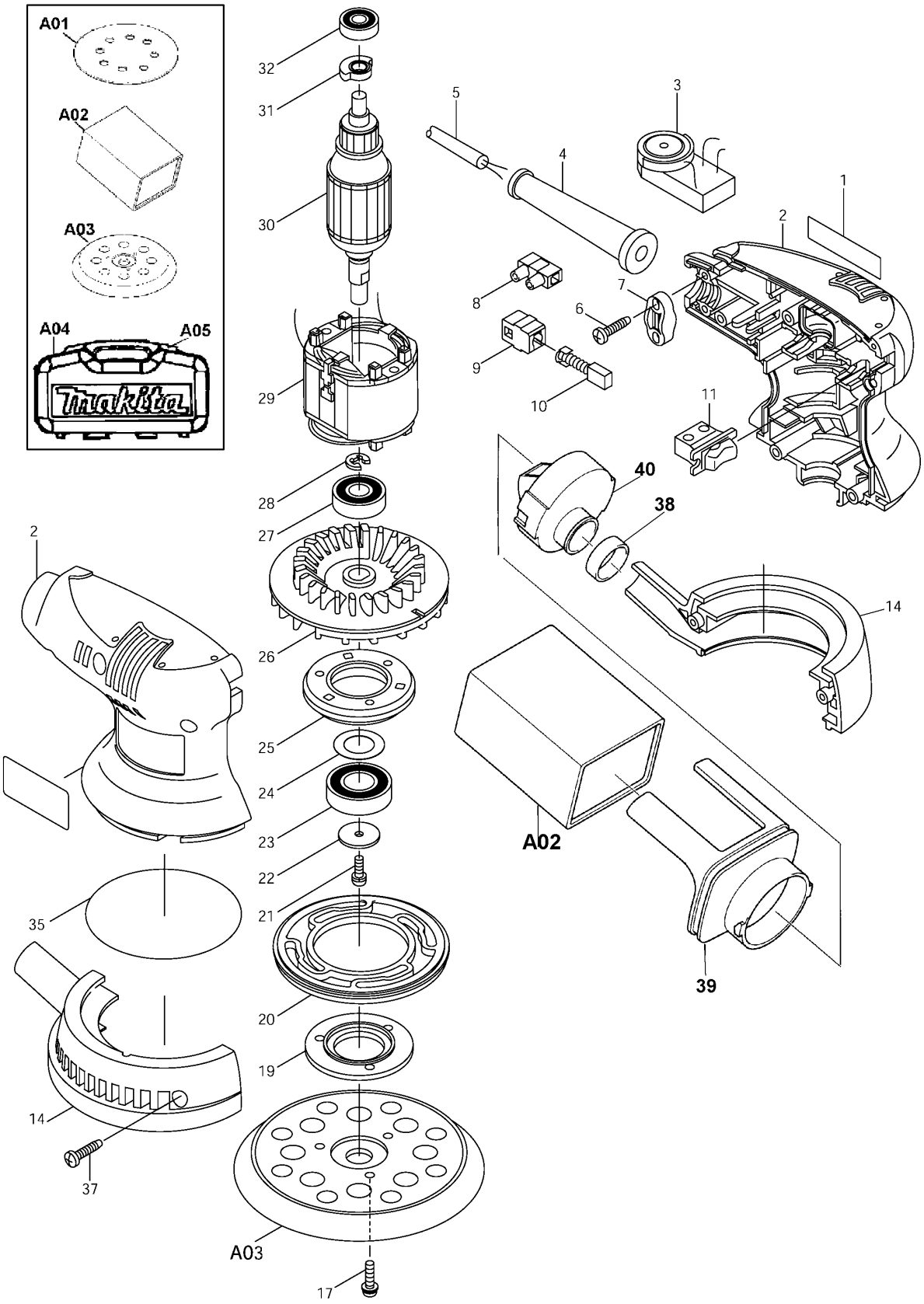

09-2003

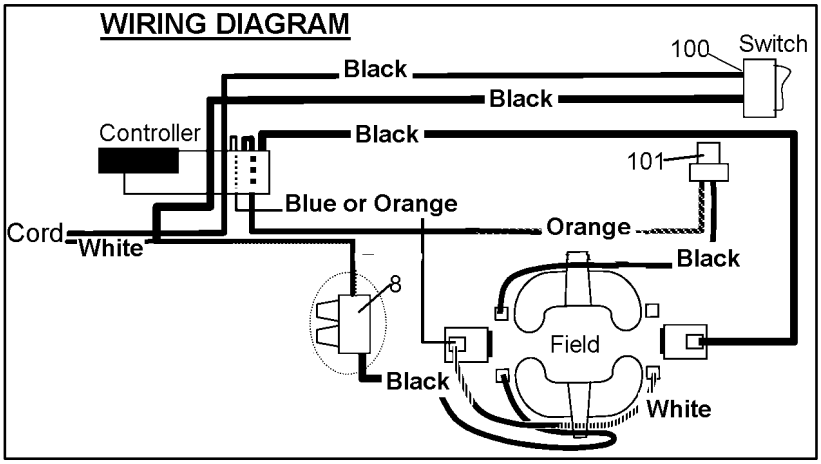

Item No.	Part No.	No. Used	Description	Item No.	Part No.	No. Used	Description
1	819063-3	1	Makita Label	29	633551-4	1	Field
2	183561-6	1	Housing Set (Includes Item 1 & Rubber Pin 4 - 2X263002-9)	30	517231-9	1	Armature Assy (Includes 26, 27, 28, 31 & 32)
3	A00951-0	1	Controller	31	313080-0	1	Counter Weight
4	682502-4	1	Cord Guard 8-85	32	210017-7	1	Ball Bearing 607DDW
5	664013-1	1	Cord With Plug 2P-18-2.5M	35	213755-0	1	O Ring 75
6	265995-6	2	Tapping Screw 4X18	37	265995-6	7	Tapping Screw 4X18
7	687063-9	1	Strain Relief	38	257202-1	1	Ring 25
8	654532-5	1	Terminal Block 1P	39	416063-0	1	Dust Bag Nozzle
9	643552-4	2	Brush Holder 5-8	40	416064-8	1	Dust Nozzle
10	191956-9	2	Carbon Brush CB-75 (2pcs/Set)	100	654037-5	2	Insulated Eye Terminal RBV 1.25-3.5
11	651523-7	1	Switch				
14	183088-6	1	Skirt Set	101	654509-0	1	Closed End Terminal 2-SD
17	911128-8	3	P.H. Screw M4X16				
19	316834-4	1	Bearing Box Cover				
20	416062-2	1	Brake Ring	**Accessories**			
21	911116-5	1	P.H. Screw M4X12				
22	253739-6	1	Flat Washer 4	A01	- - - -	1	5” Hook & Loop Abrasive Disc (See Catalogue for Details)
23	211236-8	1	Ball Bearing 6002DDW				
24	253315-6	1	Thin Washer 15	A02	166047-5	1	Dust Bag
25	316835-2	1	Bearing Box	A03	743051-7	1	Pad 123
26	241896-2	1	Fan 88	A04	824562-2	1	Plastic Carrying Case (Includes Item A05)
27	210020-8	1	Ball Bearing 6000LLU				
28	961015-1	1	Stop Ring E-9	A05	416400-0A	2	Slide Latch

REPAIR TOOLS

1R032 - Bearing Setting Plate A=ϕ 8.2mm
1R033 - Bearing Setting Plate A=ϕ 10.2mm
1R269 - Bearing Extractor